表贴全陶瓷石英晶体谐振器 SMD All Ceramic Quartz Crystal Resonators

SMAC-7050H

FEATURES

- All ceramic epoxy sealed SMD package
- 2/4 pads version available
- Self-Material supply
- RoHS Compliant and Pb Free

Electrical Specifications

Parameters	Symbol	Specifications
Nominal Frequency Range 标称频率范围	f_0	6.0MHz ~ 28.224MHz
Frequency Tolerance, Ta=25°C ± 3°C 常温频率偏差	Δf/f	±20ppm, ±30ppm
Load Capacitance 负载电容	C_L	18pF or specify
Frequency Tolerance over Operating Temperature Range 频率温度特性	Δf/f	±20ppm, ±30ppm or specify
Operating Temperature Range 工作温度	T_{OPR}	-20°C ~ +70°C, -20°C ~ +85°C or specify
Storage Temperature Range 储存温度	T_{STG}	-55°C ~ +125°C
Drive Level 激励功率	DL	100μW Typ.
Shunt Capacitance 静态电容	C_0	7pF Max.
Insulation Resistance 绝缘电阻	IR	500MΩ Min.
Aging 老化率	$Δf_A$	±5ppm/Year Max.

Equivalent Series Resistance (ESR) 串联谐振阻抗

Frequency Range	$6<f_0≦8$	$8<f_0≦12$	$12<f_0≦25$
ESR	80Ω Max.	60Ω Max.	50Ω Max.

Please consult our sales representatives for other specifications. 如对其他规格查询，请与我司销售人员联系。

Dimensions

SMAC - 7050H (2 pads)

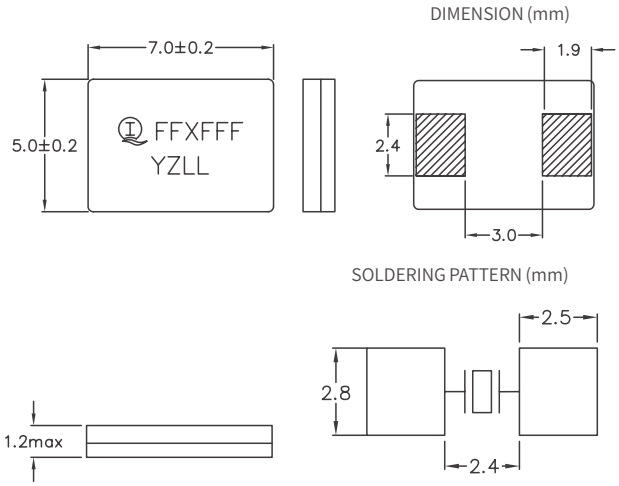

SMAC - 7050H (4 pads)

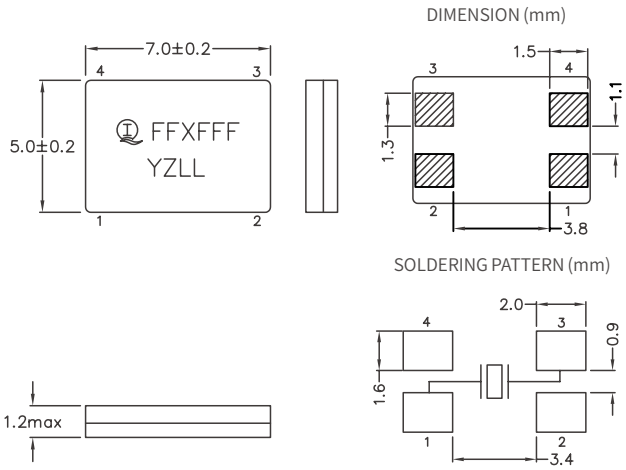

All specifications are subject to change without prior notice. 本公司保留修改规格的权利。