SMCE-5032

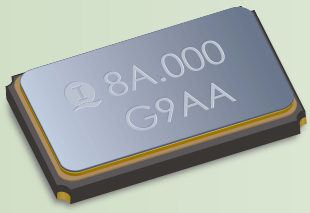

FEATURES

- Surface mount ceramic enclosures
- High reliability seam welded package
- Conforms to AEC-Q200 (Optional)
- Wide frequency range
- RoHS Compliant and Pb Free

Electrical Specifications

Parameters	Symbol	Specifications
Nominal Frequency Range 标称频率范围	f_0	8.0MHz ~ 156.25MHz
Frequency Tolerance, Ta=25°C ± 3°C 常温频率偏差	Δf/f	±10ppm, ±20ppm
Load Capacitance 负载电容	C_L	18pF or specify
Frequency Tolerance over Operating Temperature Range 频率温度特性	Δf/f	±10ppm, ±20ppm, ±50ppm or specify
Operating Temperature Range 工作温度	T_{OPR}	-20°C ~ +70°C, -40°C ~ +85°C, -40°C ~ +125°C or specify
Storage Temperature Range 储存温度	T_{STG}	-55°C ~ +125°C
Drive Level 激励功率	DL	100μW Typ.
Shunt Capacitance 静态电容	C_0	7pF Max.
Insulation Resistance 绝缘电阻	IR	500MΩ Min.
Aging 老化率	Δf_A	±3ppm/Year Max.

Equivalent Series Resistance (ESR) 串联谐振阻抗

Frequency Range	$8<f_0\leqq16$	$16<f_0\leqq25$	$25<f_0\leqq30$	$30<f_0\leqq54$	$54<f_0\leqq156.25$
ESR	80Ω Max.	50Ω Max.	40Ω Max.	35Ω Max.	80~100Ω Max.

Please consult our sales representatives for other specifications. 如对其他规格查询，请与我司销售人员联系。

Dimensions

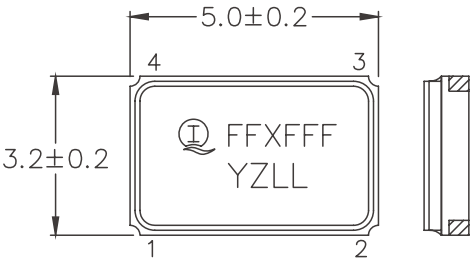

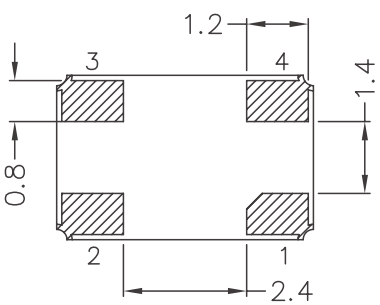

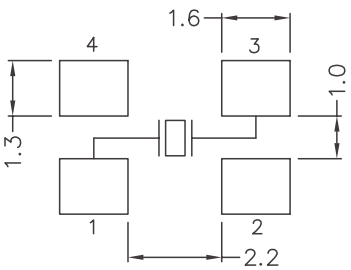

DIMENSION (mm)

SOLDERING PATTERN (mm)

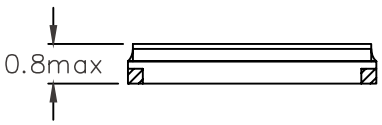

All specifications are subject to change without prior notice. 本公司保留修改规格的权利。